Profactor Armaturen GmbH

EN

PROFACTOR®
DER DEUTSCHE QUALITÄTSSTANDARD

TECHNICAL DATA SHEET AND USER MANUAL

PRODUCT CODE

PF FS 876
PF FS 877
PF FS 878
PF FS 879
PF FS 880
PF FS 881

SELF-CLEANING FILTER

1. PURPOSE AND SCOPE

PROFACTOR® self-cleaning filters are intended for cleaning cold drinking and service water of mechanical impurities. They protect the pipelines, valves, and equipment installed on it against water-insoluble admixtures: sand, cuttings, hemp, rust, etc.

The filter is installed upstream the water meters, control valves, flow meters, “wet” motor rotor pumps and other devices with the raised requirements to the purity of water passing through them. The filter is not intended for the protection from the water-soluble substances, solvents, grease, oils, and other lubricating materials.

2. TECHNICAL SPECIFICATIONS

Working pressure: 2 – 16 bar
Mesh size (filtration degree): 90 µm
Working fluid temperature: 3°C – 30°C (short-term up to 60°C)
Environmental temperature: 5°C – 45°C
Throughput capacity Kvs: 3 m^3/h
Connection: 2 connection options in a set — 1/2" and 3/4"
Pressure adjustment range (for PF FS 877 and PF FS 880 filters): 0 – 9 bar

Product Code	PF FS	876	877	878	879	880	881
Built-in pressure regulator		—	yes	—	—	yes	—
Hydraulic shock protection		—	—	yes	—	—	yes
Possibility of connection to pipeline		Only on a horizontal pipe section			At any angle (0°–360°)		

3. DESIGN

PROFACTOR® self-cleaning filters are provided with the manual “TWIST TO CLEAN” cleaning system. PROFACTOR® PF FS 877 and PF FS 880 filter models feature a built-in pressure controller and PF FS 878 and PF FS 881 filter models are provided with the integrated hydraulic shock protection system. Pressure regulator and hydraulic shock protection cartridges are easily removable and replaceable. Hydraulic shock protection cartridge may be installed instead the pressure regulator cartridge and vice versa, also each of the cartridges may be installed on PF FS 876 and PF FS 879 filter models instead of the cover (2-1).

PROFACTOR® filter models PF FS 879, PF FS 880 and PF FS 881 are provided with the rotary mechanism allowing to install the unit on the pipeline at any angle.

All the PROFACTOR® self-cleaning filters are provided with two sets of connecting branches with 1/2" and 3/4" taper pipe thread for connection to the pipeline and pressure gauges.

A filter screen (5-3) is made of AISI 316L (DIN EN 10088) stainless steel resistant to corrosion in aggressive media.

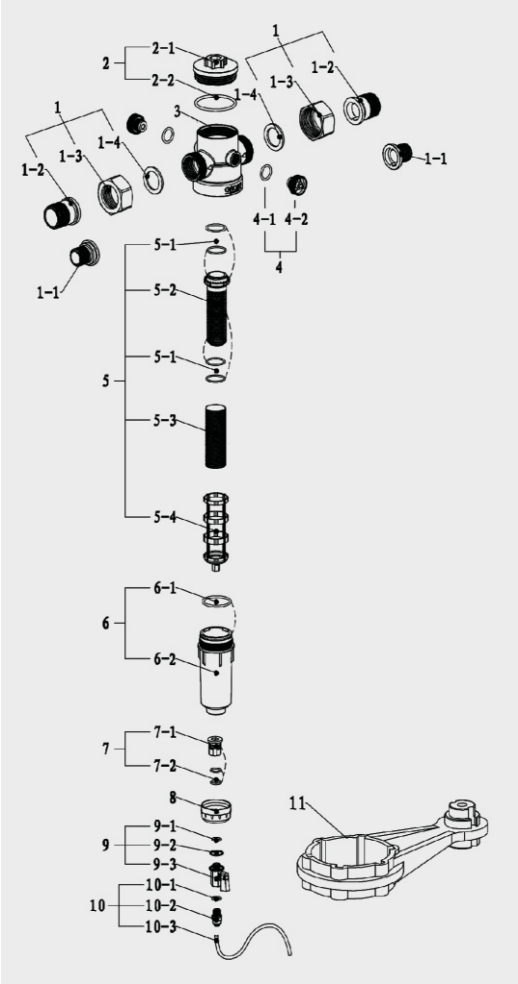

1-1 1/2" connecting branch
1-2 3/4" connecting branch
1-3 Cap nut
1-4 Gasket
2-1 Cover
2-2 O-ring
3 Casing
4-1 O-ring
4-2 Plug
5-1 O-ring
5-2 Cartridge
5-3 Filter screen
5-4 Brush
6-1 O-ring
6-2 Bowl
7-1 Connector
7-2 O-ring
8 Handwheel
9-1 O-ring
9-2 Spring
9-3 Drain ball valve
10-1 O-ring
10-2 Drain hose connector
10-3 Drain hose
11 Adjusting wrench

Parts 1-1, 1-2, 1-3, 3, 7-1 — Brass CW617N (DIN EN 12165-2011)
Filter screen 5-3 — Stainless steel AISI 316L (DIN EN 10088)
Parts 2-1, 4-2, 5-2, 5-4, 8, 9-2 — ABS plastic
Sealing rings — EPDM
Gasket 1-4 — Paronite
Bowl 6-2 — PC polycarbonate

The hydraulic shock protection cartridge represents a cylinder divided by a piston into two chambers: a closed air chamber acts as a damper, an open chamber is connected to the filter casing.

Pressure regulator valve cartridge has a diaphragm of special design that provides precise pressure control.

4. OPERATING PRINCIPLE

Untreated water is supplied to the filter via an inlet port and passes through a filter screen (5-3) to the outlet port. At this stage, mechanical impurities with the size exceeding 90 µm are retained by the external side of the screen. The purified water is supplied to the piping system.

The “TWIST TO CLEAN” cleaning system: when rotating the handwheel (8), the brush (5-4) rotates along with it while scraping off the dirt deposited on the external surface of the filter screen (5-3).

The hydraulic shock protection cartridge of PF FS 878 and PF FS 881 filter models absorbs the shockwave in case of the water shutoff due to the air and spring installed downstream the piston in the shock-absorbing chamber.

The pressure regulator chamber also has the hydraulic shock protection function and allows setting the outlet pressure.

5. NOMENCLATURE AND DIMENSIONS

PF FS 876 PF FS 877 PF FS 878		PF FS 879 PF FS 880 PF FS 881	
R	L	R	L
1/2"	148 mm	1/2"	149 mm
3/4"	160 mm	3/4"	161 mm

PROFACTOR® PF FS 876 self-cleaning filter:

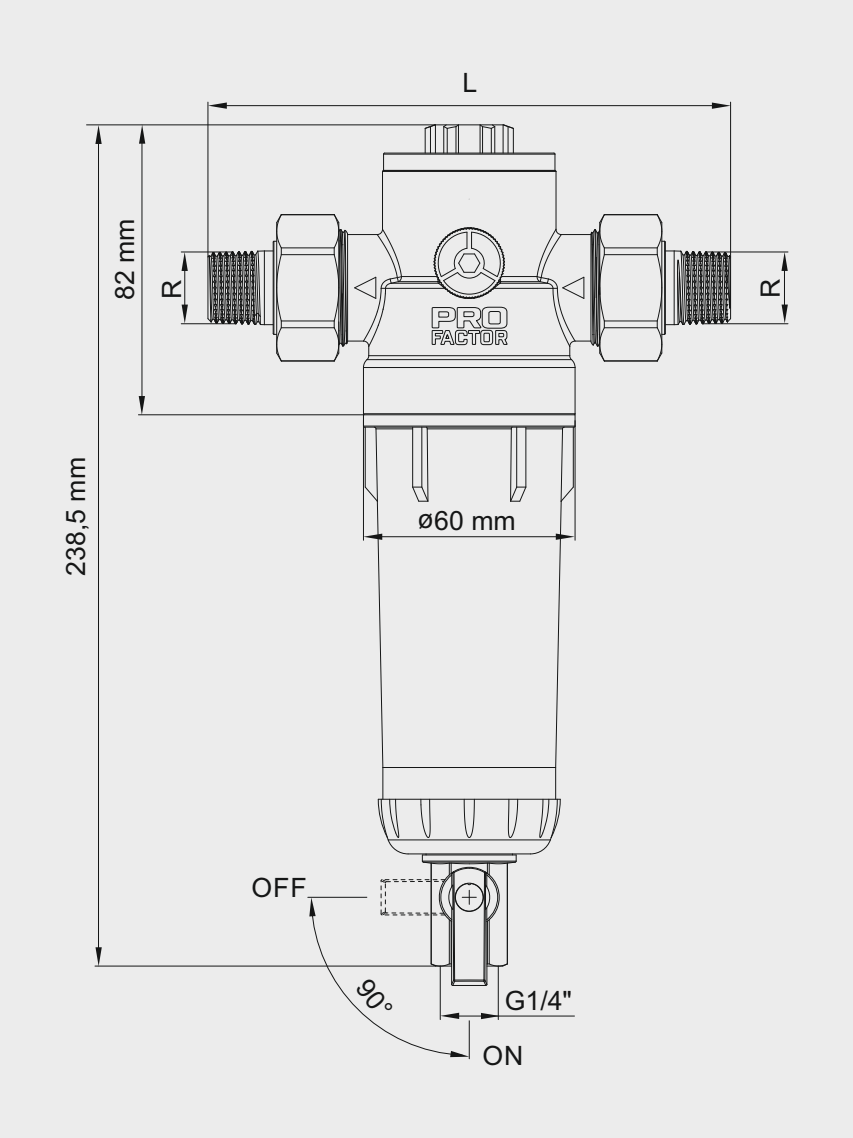

PROFACTOR ARMATUREN GMBH
Ruffiniallee 9, c/o Kanzlei Antegra, 82166 Gräfelfing, Germany. Telefon: +49 89 21546092
E-mail: info@pf-armaturen.de, Internet: www.profactor.de

PROFACTOR® PF FS 877 self-cleaning filter with pressure regulator:

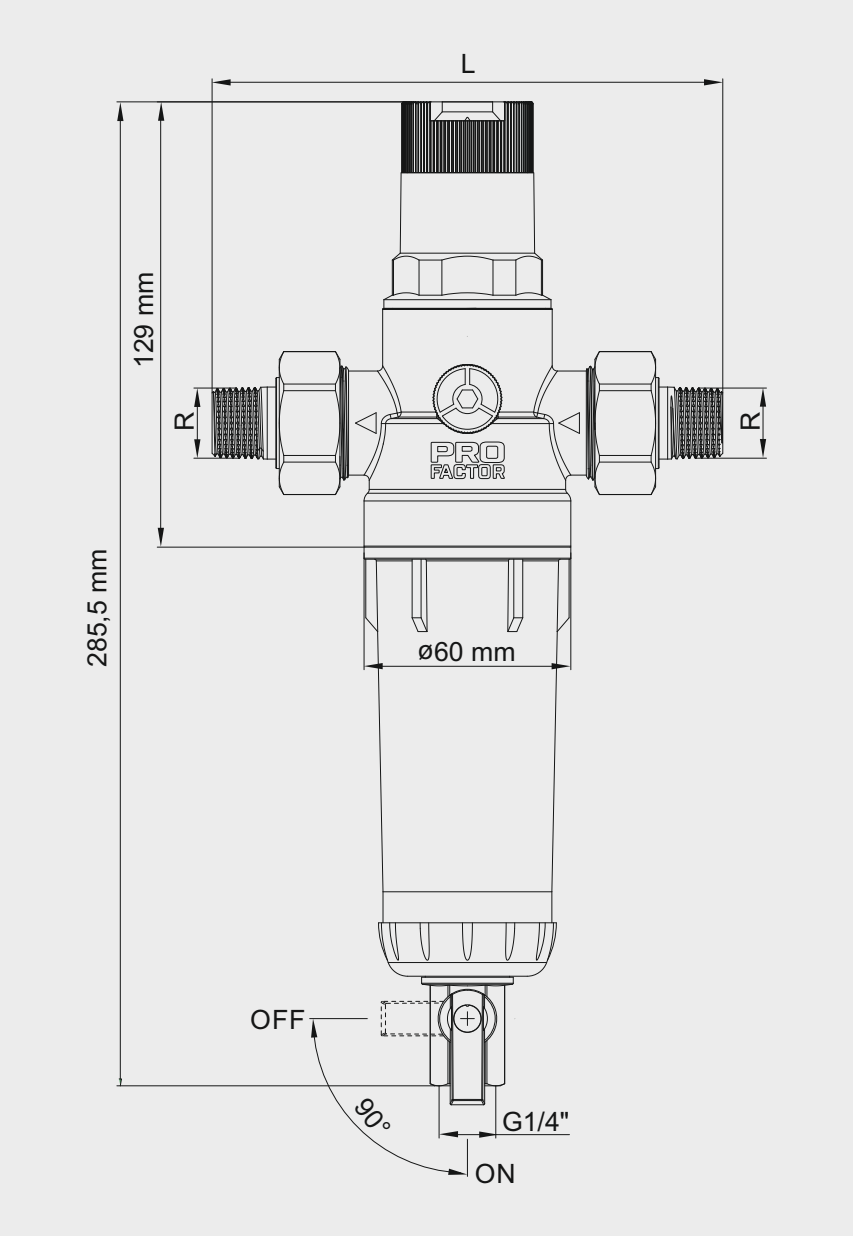

PROFACTOR ARMATUREN GMBH
Ruffiniallee 9, c/o Kanzlei Antegra, 82166 Gräfelfing, Germany. Telefon: +49 89 21546092
E-mail: info@pf-armaturen.de, Internet: www.profactor.de

PROFACTOR® PF FS 878 self-cleaning filter with water hammer arrester:

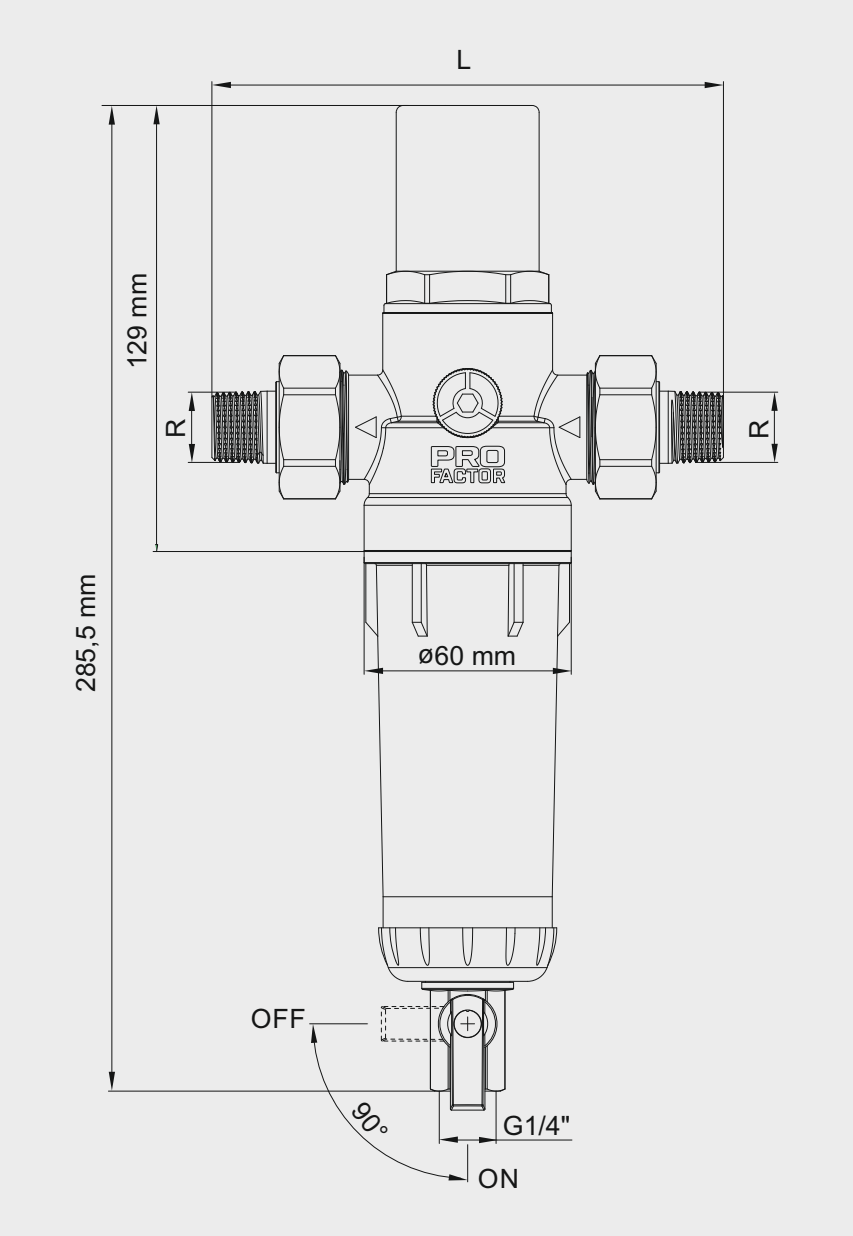

PROFACTOR® PF FS 879 self-cleaning filter mountable on the pipeline at any angle:

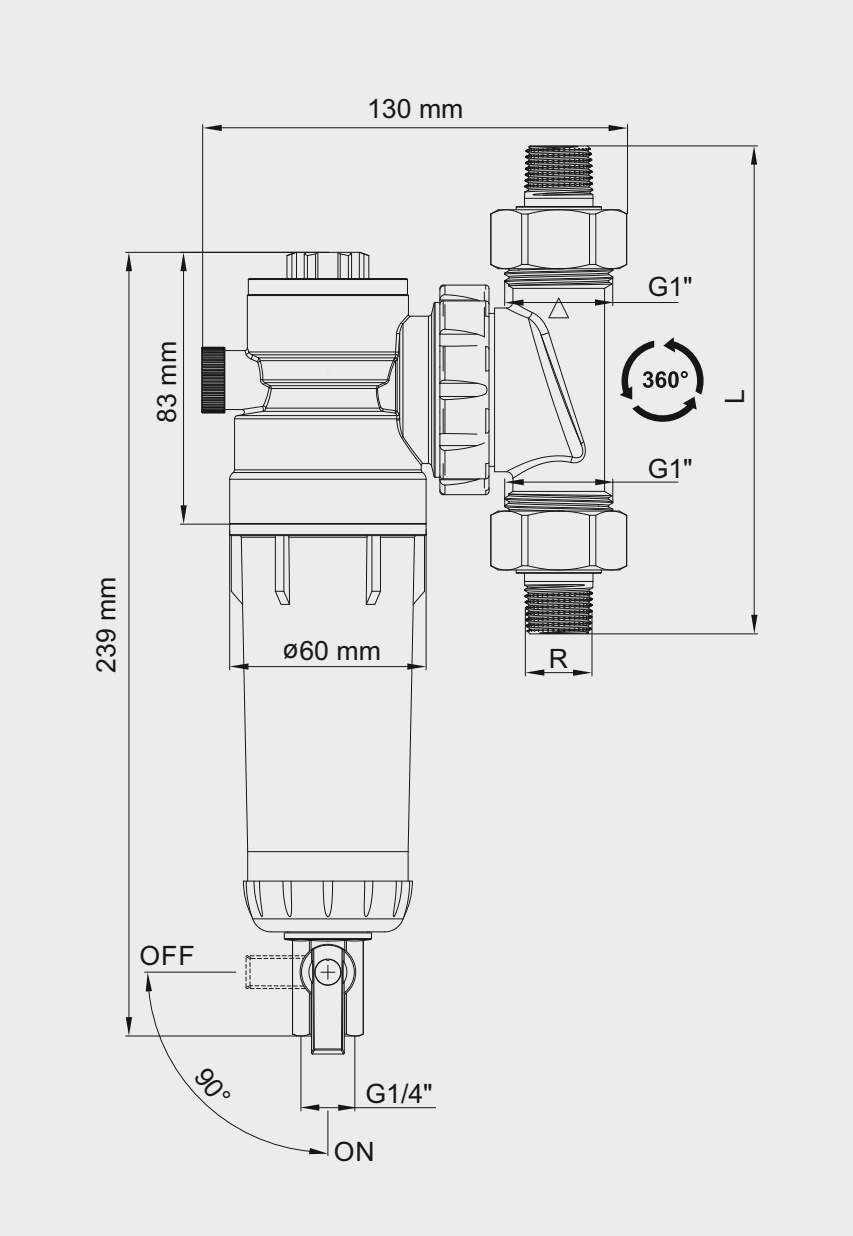

PROFACTOR® PF FS 880 self-cleaning filter with a pressure regulator mountable on the pipeline at any angle:

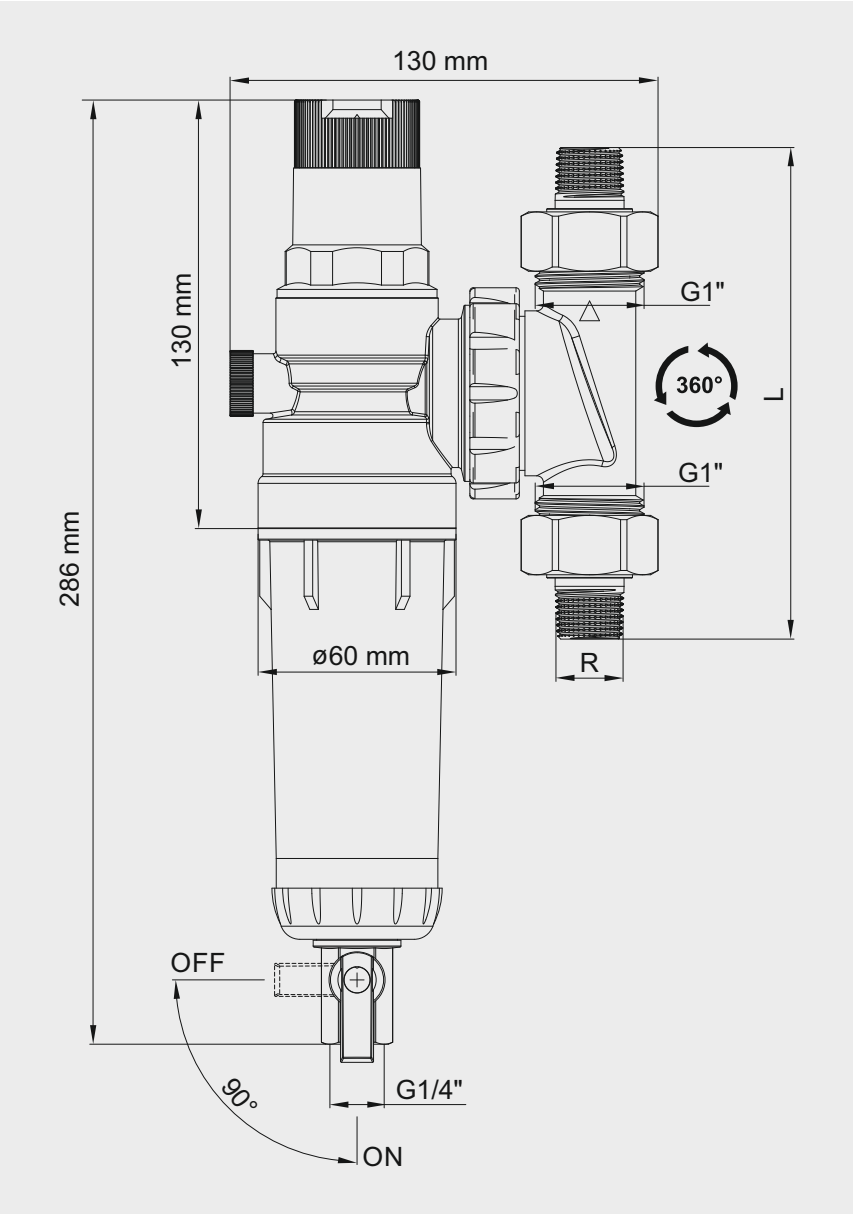

PROFACTOR® PF FS 881 self-cleaning filter fitted with hydraulic shock protection system mountable on the pipeline at any angle:

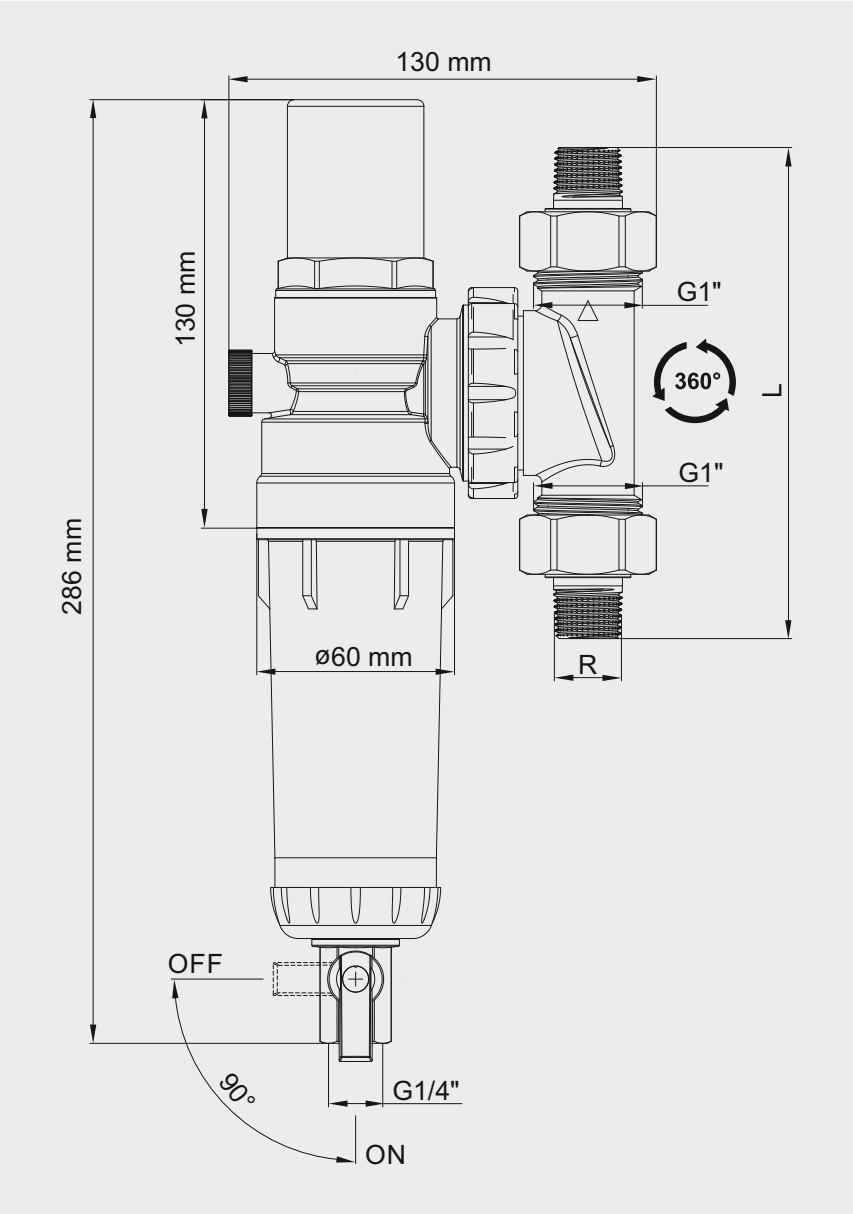

6. INSTALLATION INSTRUCTIONS

PROFACTOR® PF FS 876, PF FS 877, PF FS 878 filter models shall only be installed on the horizontal section of the pipeline in their vertical position with the bowl directed downwards in a manner that an arrow drawn on the casing coincides with the filtered water flow direction. If the filter should be installed on a vertical or inclined pipe section, the PROFACTOR® PF FS 879, PF FS 880, PF FS 881 filters with the rotary mechanism are recommended. Furthermore, pay attention that the filter bowl (6-2) is located vertically and directed downwards, and the arrow on the casing coincides with the flow direction.

Install the PROFACTOR® filters in heated premises, in easily accessible places to facilitate taking the readings and maintenance procedures.

Avoid loads caused on PROFACTOR® by the pipeline (bending, compression, stretching, twisting, distortion, vibration, connection pipe misalignment, fixture tightening imbalance). If necessary, supports or expansion joints shall be provided to reduce the load caused on the filter by the pipeline. Misalignment of pipelines being connected should not exceed 3 mm at length below 1 m plus 1 mm per each subsequent meter.

Before installation, the pipeline is recommended to be washed. Manual shutoff valves are recommended to be installed for planned maintenance at the pipeline section, where the filter is installed.

Threaded connections shall be made using the PTFE-tape, polyamide thread or flax as the wicking sealing material.

Check the installation. Close the washing valve, then open the shutoff valves, open the closest water tap and drain the initial flowing out water. Check the filter for leak tightness.

7. OPERATION AND MAINTENANCE

PROFACTOR® filter should not be exposed to direct sunlight, UV radiation, heat sources above 65°C, solvent vapors, oils, alkaline washing solutions, any chemical substances. Avoid contact of oils and grease with the plastic parts of the filter.

Avoid operation at the filters at the excessive temperature and pressure above the values shown in p.2. The noticeable pressure decrease at the filter, which is determined by the pressure gauge readings, may indicate that the filter element needs to be replaced.

PROFACTOR® self-cleaning filters are provided with the manual “TWIST TO CLEAN” cleaning system allowing to clean the filter screen without taking it out and shut off the water supply. For this purpose, simply rotate the handwheel (8) back and forth.

If it is insufficient, remove the filter screen. To remove the screen: close the stop valves upstream and downstream the filter, place a water container below the filter, open the drain valve (9-3) and drain the water. Then unscrew the bowl (6-2) using the wrench (11) and remove the filtering cartridge (5), remove the brush (5-4) and filter screen (5-3). Clean or replace the screen and reinstall the cartridge (5-2).

ATTENTION: to clean the filter element, do not use solvents or detergents, including the acidiferous detergents.

Then reinstall the brush (5-4), install the filtering cartridge in the bowl (6-2) and screw it in the casing (3) using the wrench (11). Close the drain valve and open the stop valves upstream and downstream the filter. Discharge the air from the pipeline using the nearest draw-off tap and drain the initial flowing out water. Check the filter for leak tightness.

ATTENTION: do not connect the washing valve to the sewage network without the jet break, since blockage or overflow of the sewage network may result in the effluent water getting into the water supply pipeline.

According to the requirements of DIN 1988-2011, part 8, the leak tightness and filter pollution level should be visually checked once per 2 months with washing the filter.

The pressure regulator cartridge of PROFACTOR® PF FS 877 and PF FS 880 filter models allows setting the outlet pressure in the range from 0 to 9 bar. To this end, simply rotate the disc to set the indicator against the required value.

8. WARRANTY OBLIGATIONS

The warranty period is 12 months from the date of sale to the end consumer. Throughout the entire warranty period, the manufacturer guarantees the proper functioning of the product and its compliance with safety requirements, provided that the consumer follows the rules for storage, transportation, installation, operation, and maintenance of the product. The warranty covers all defects arising through the manufacturer's fault.

The warranty does not cover defects resulting from:

— Violation of storage, transportation, installation, operation, or maintenance conditions;
— Exposure to substances aggressive to the materials of the product;
— Signs of mechanical damage;
— Damage caused by fire, natural disasters, or other force majeure circumstances;
— Damage caused by improper actions of the user;
— Evidence of unauthorized interference with the product design.

The product described in this technical manual is a technically complex device that must be installed by a qualified specialist with appropriate experience working with this type of equipment.

Installation and commissioning must be carried out by an authorized and certified company.

Profactor Armaturen GmbH reserves the right to make changes to the product design that do not affect its technical characteristics or functional features.

PROFACTOR ARMATUREN GMBH
Ruffiniallee 9, c/o Kanzlei Antegra, 82166 Gräfelfing, Germany. Telefon: +49 89 21546092
E-mail: info@pf-armaturen.de, Internet: www.profactor.de

INTERNATIONAL WARRANTY CARD

NAME OF THE PRODUCT

PRODUCT CODE, SIZE

QUANTITY

SELLER NAME AND ADDRESS

DATE OF PURCHASE

SELLER STAMP

SELLER SIGNATURE

For the warranty term refer to the Warranty obligation clause in the technical manual

FOLD LINE

FOLD LINE

In case of any claims to the product quality the following documents should be submitted:

1. Application with customer and product detailes:

— Name of the customer, actual address and phone number

— Article of the product

— Reason for the claim and photo

— Plumbing system where installed (name, address, phone number)

2. Invoice copy and receipt

3. Warranty card

RETURN/EXCHANGE COMMENTS

DATE

SIGNATURE

Profactor Armaturen GmbH

Ruffiniallee 9, c/o Kanzlei Antegra, 82166 Gräfelfing, Germany;
Tel.: +49 89 21546092; info@pf-armaturen.de; www.profactor.de